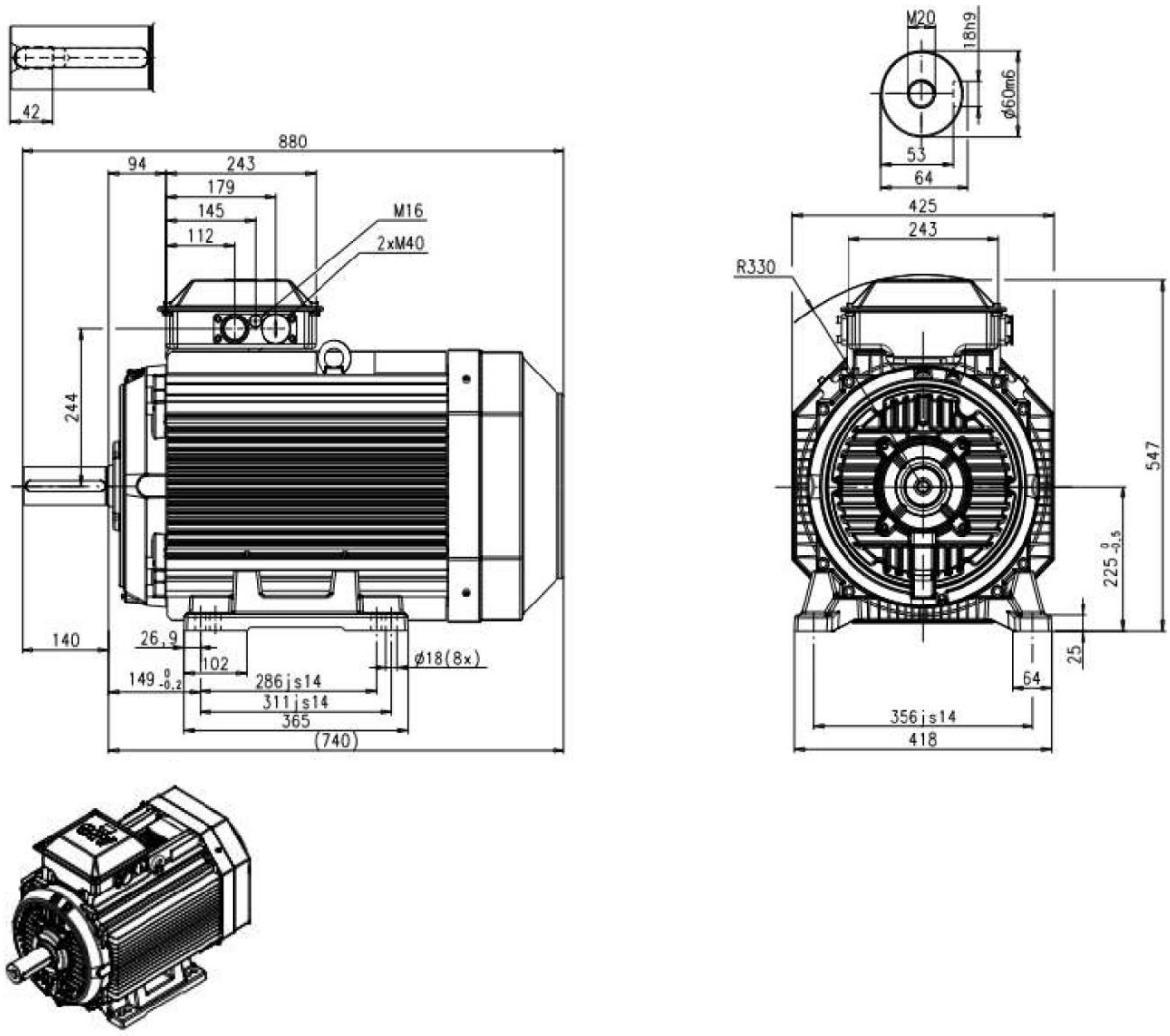

Additional information:

Dimension Print	Motor Type: M3AA 225 4-6p IM 1001	Document No: 3GZV 102 029-G A1.5113
Description: Three phase motor		

Unit:	ABB AB, LV Motors, Sweden.	Issued by:	B. Abujheisha	Replaces:
Date:	2012-09-29	Approved by:	N. Jonsson	Replaced by:

ABB Oy	Customer Reference:	ABB