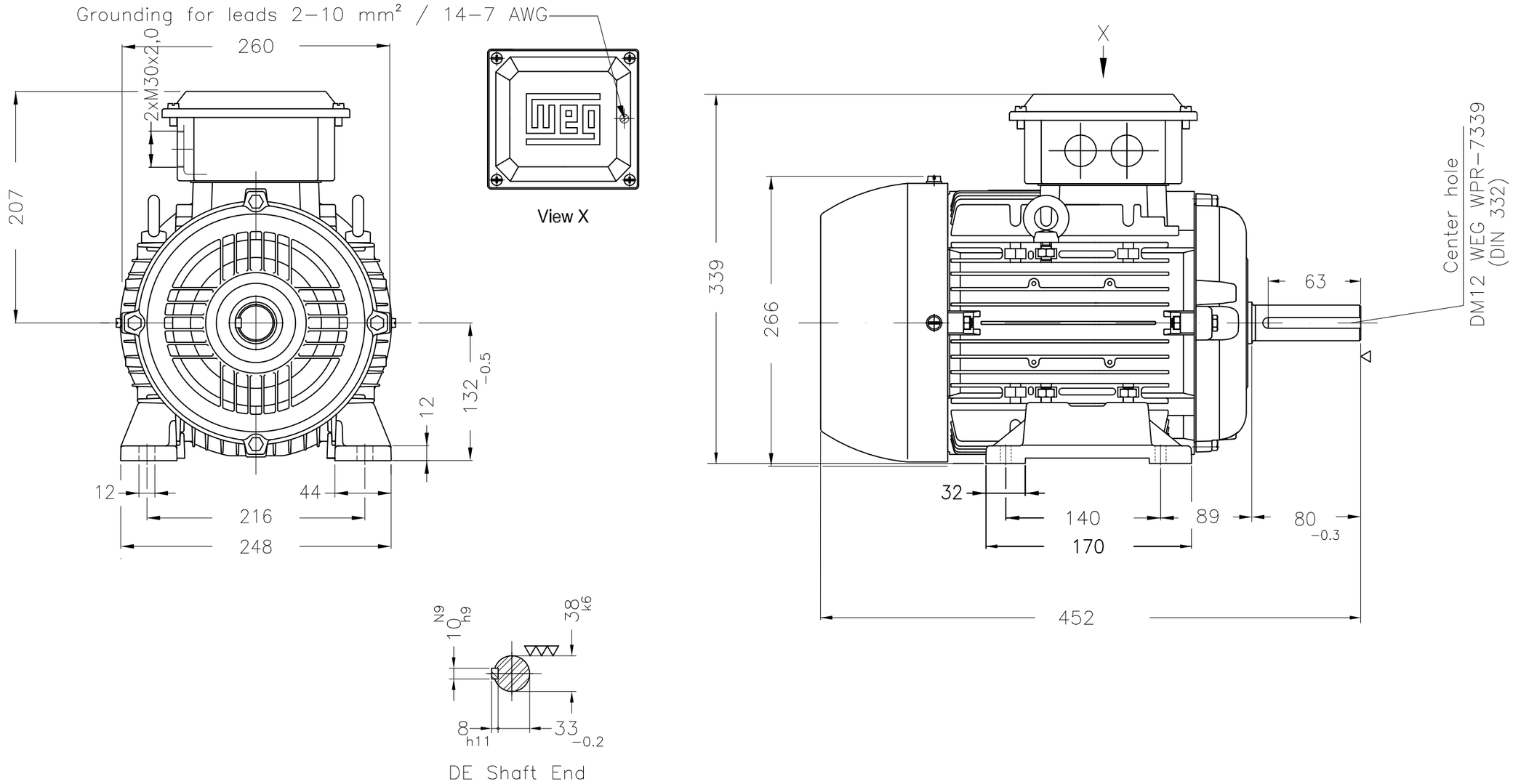


Dimensions in mm

Color RAL 5009

Painting plan 201A

Mounting B3T

| ECM | LOC | SUMMARY OF MODIFICATIONS | EXECUTED | CHECKED | RELEASED | DATE | VER |
|---|---|---|---|---|---|---|---|
| | | | HYBRISUSER | | | | 00 |

| | | | |
|---|---|---|---|
| EXECUTED | HYBRISUSER | THREE PH. MOTOR W20 GB3 | PREVIEW |
| CHECKED | | FRAME S132S IP55 TEFC | WDD 00 |
| RELEASED | | | |
| REL. DATE | | WMO Jaragua do Sul Product Engineering | SHEET 1 / 1 |

5.5 kW 02 Poles 50 Hz

A

XME A3

WEG's property. Forbidden reproduction without previous authorization.